TOP VIEW

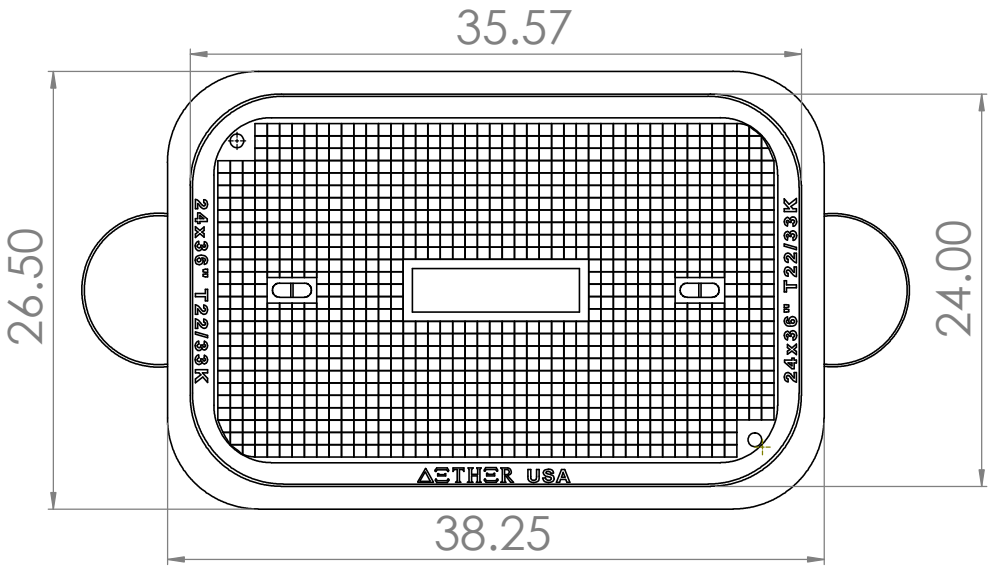

SIDE VIEW

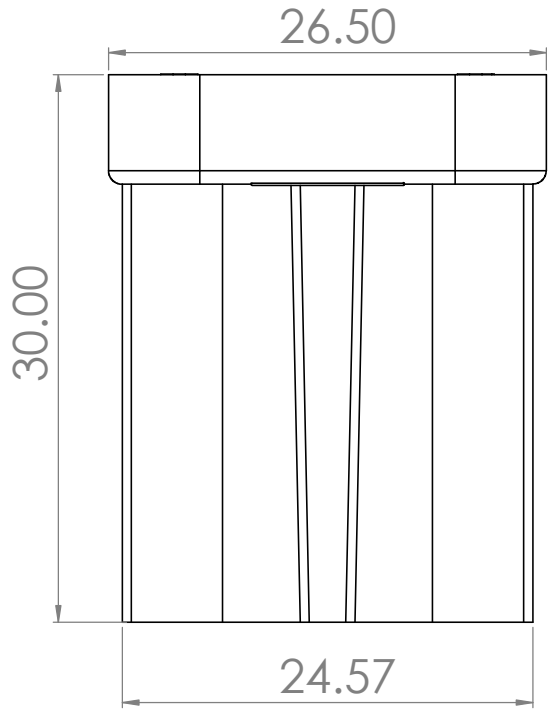

FRONT VIEW

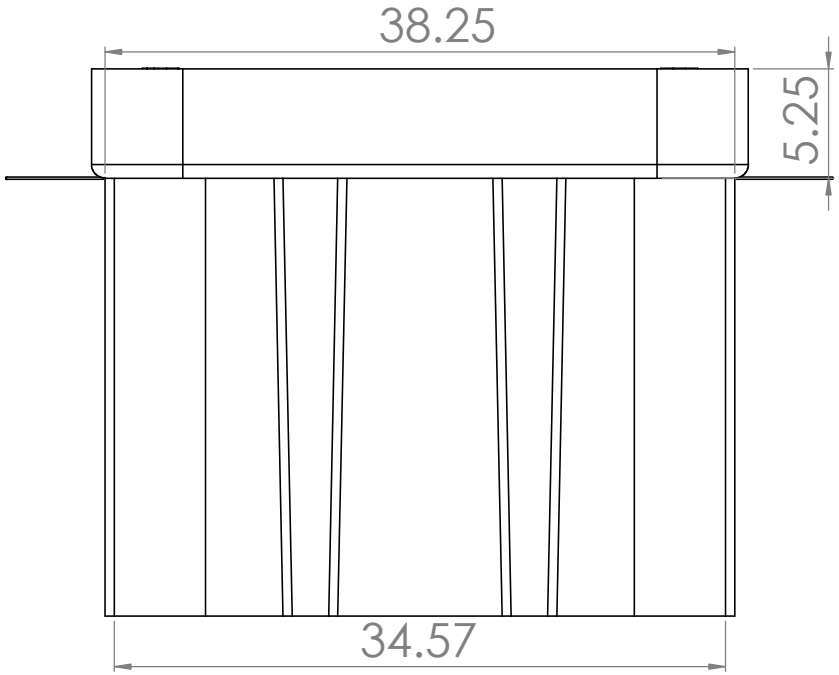

ALL THE MEASURES AREINDICATED ON INCHES	FINISH	NATURAL			
	NAME	SIGNATURE	DATE		
APPROVAL	Miguel Benitez		6/30/2025		
				Total Weight	372 LBS
				MATERIAL: POLYMER CONCRETE	AEPC24x36x30T22

A3

Property of Aether USA LLC